本公司智慧财产未经许可不得复制
ming biao copyright,may not be used without permission from ming biao.

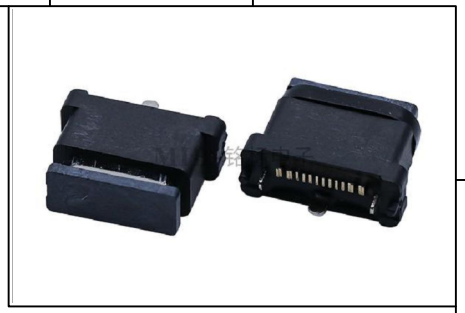

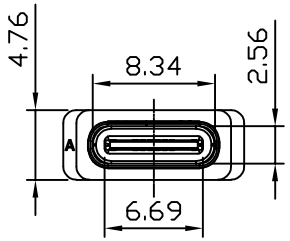

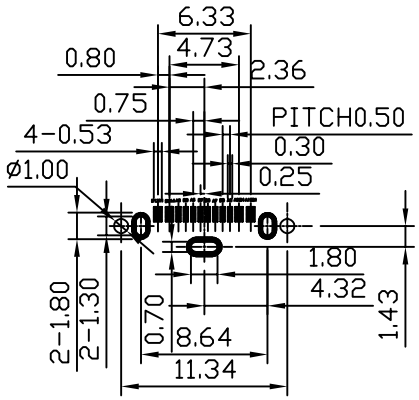

P.C.B LAYOUT

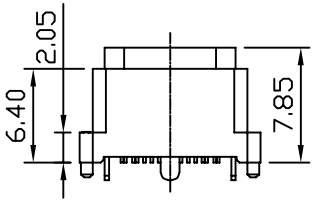

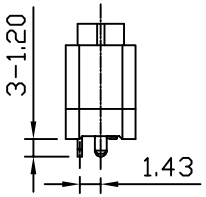

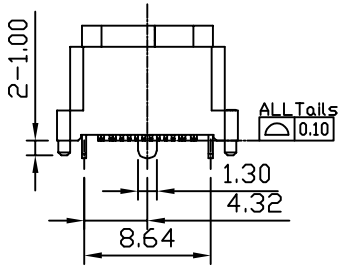

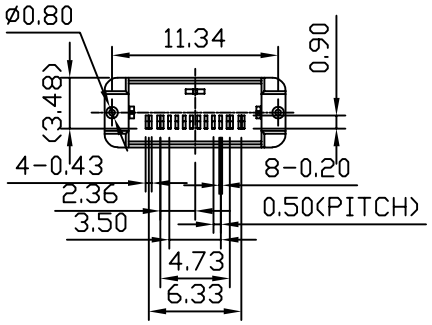

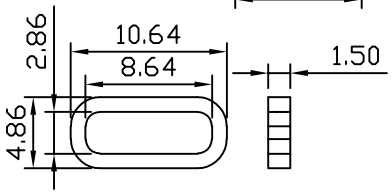

外壳参考设计图

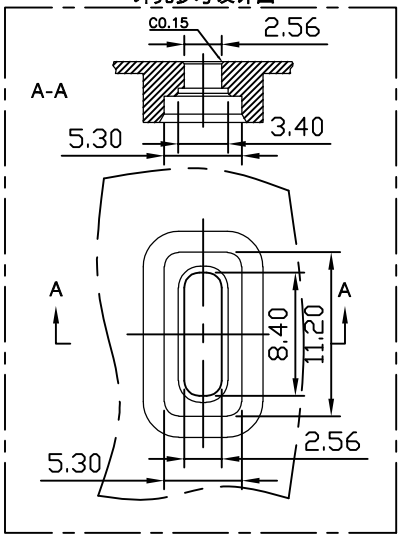

组装示意图

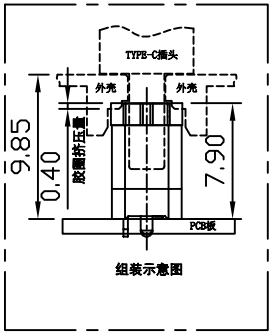

组装示意图

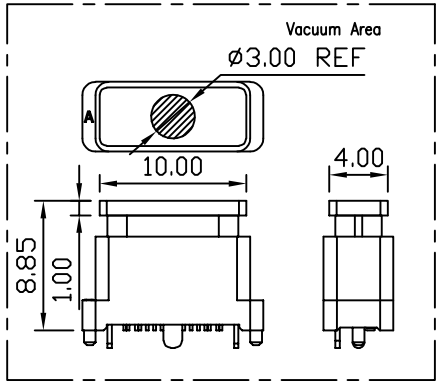

A1	GND	B12	GND
A4	VBUS	B9	VBUS
A5	CC1	B8	SBU2
A6	DP1	B7	DN2
A7	DN1	B6	DP2
A8	SBU1	B5	CC2
A9	VBUS	B4	VBUS
A12	GND	B1	GND
PIN	SIGNAL NAME	PIN	SIGNAL NAME

NOTES:
SPECIFICATION:
1. CURRENT RATING: 3.0A MAX
2. DIELECTRIC WITHSTAND VOLTAGE: 100VAC
3. TEMPERATURE RANGE: -30 °C ~ 85 °C
4. CONTACT RESISTANCE: 40 MILLIONHM MAX
5. INSULATION RESISTANCE: 100 MEGOHMS MIN.
6. INSERTION FORCE : 5N~20N
7. UNMATING FORCE: 8N~20N
8. DURABILITY:10,000 CYCLES

MING BIAO 铭标 2024.06.28 ISSUED R&D DEPT

RoHS COMPLIANT · Pb Pb-Free · HF Halogen Free

东莞市铭标电子科技有限公司
Ming Biao Electronic Technology Co. ,Ltd.

TOLERANCE				DESIGN	DATE	TITLE	Connector
UNLESS OTHERWISE STATED				wyj	2024. 06. 28		
X.X	±0.20	SIZE	A4	CHKD	DATE	MODEL	USBC-0051IPX7-00
X.XX	±0.15	REV	A				
X.XXX	±0.10	UNIT	mm	APPD	DATE	SHEET	1/3
∡	±2°	SCALE	2:1			PRINT DATE	2025.02.18