本公司智慧财产未经许可不得复制
ming biao copyright,may not be used without permission from ming biao.

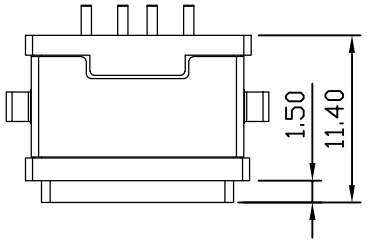

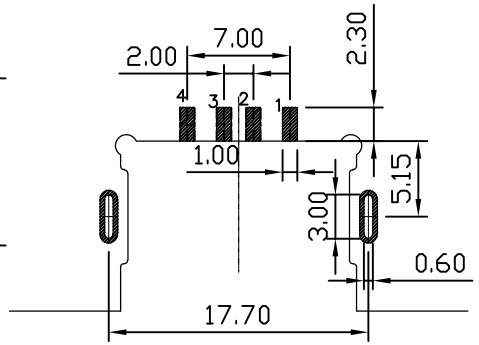

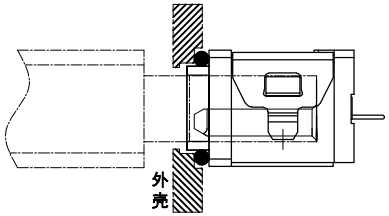

组装示意图

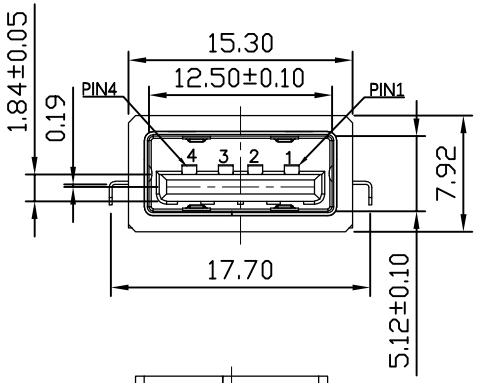

P.C.B LAYOUT

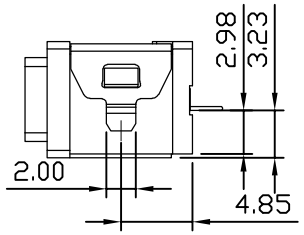

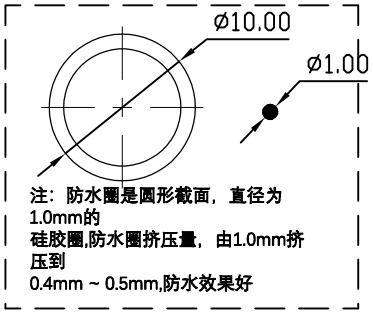

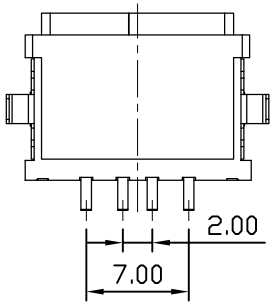

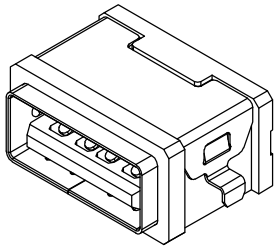

PIN ASSIGNMENT

PIN NO.	1	2	3	4
SINGAL NAME	VBUS	D−	D+	GND

ITEM	PART NAME	Q'TY	FINISH
5	Outer Shell	1	SUS 301 1/4H
4	Inner Shell	1	SUS 301 1/4H
3	PLASTIC Shell	1	PA10T (G.F30%)
2	Contact	4	C7025 Ni 50U" Au1U" Plating Solder area Sn 100−150U"
1	Housing	1	PA10T (G.F30%)

NOTES:

SPECIFICATION:

1. CURRENT RATING: 3.0A MAX
2. DIELECTRIC WITHSTAND VOLTAGE: 100VAC
3. TEMPERATURE RANGE: -30 °C ~ 85 °C
4. CONTACT RESISTANCE: 40 MILLIONHM MAX
5. INSULATION RESISTANCE: 100 MEGOHMS MIN.
6. INSERTION FORCE :10N~30N
7. UNMATING FORCE: 8N~30N
8. DURABILITY:1500 CYCLES

MING BIAO 铭标 2024.06.25 ISSUED R&D DEPT

RoHS COMPLIANT Pb Pb-Free Halogen Free

东莞市铭标电子科技有限公司
Ming Biao Electronic Technology Co. ,Ltd.

TOLERANCE UNLESS OTHERWISE STATED			
X.X	±0.20	SIZE	A4
X.XX	±0.15	REV	A
X.XXX	±0.10	UNIT	mm
∠	±2°	SCALE	2:1

DESIGN wyj	DATE 2024. 06. 25	TITLE	Connector
CHKD	DATE	MODEL	USB-1126IPX7-00
APPD	DATE	SHEET	1/3
		PRINT DATE	2025.02.17