本公司智慧财产未经许可不得复制
ming biao copyright,may not be used without permission from ming biao.

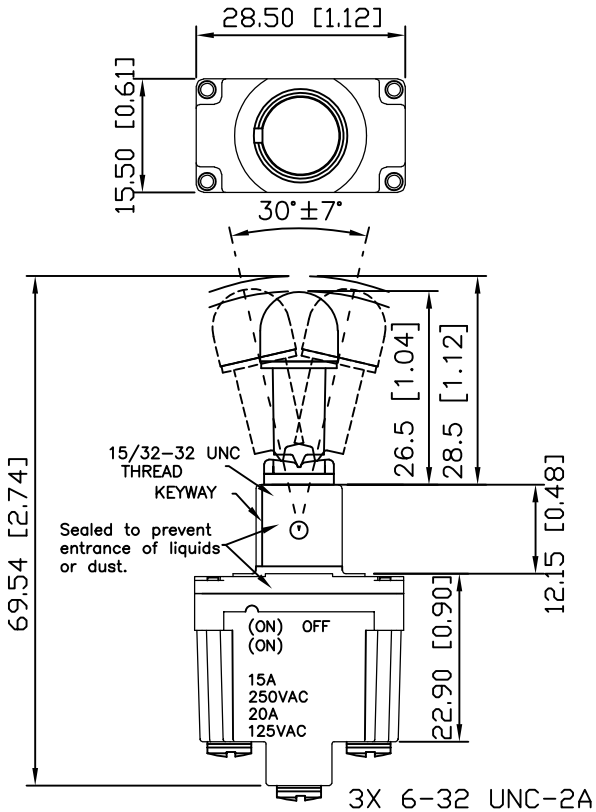

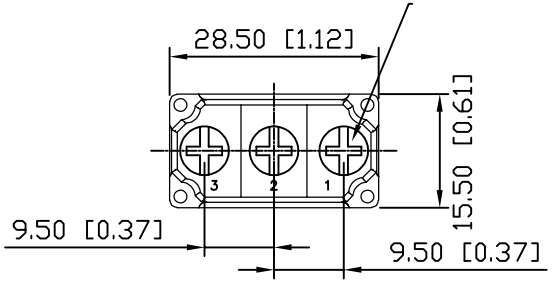

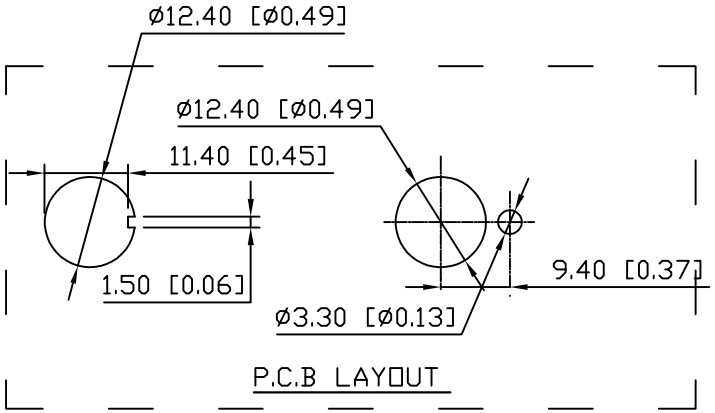

SPECIFICATIONS:
1.CONTACT RESISTANCE: 20mΩ.(Max)
2.INSULATION RESISTANCE:
100VDC-100MΩ.(Min)
3.DIELECTRIC STRENGTH: 1500VAC-1MINUTE.
4.MECHANICAL LIFE CYCLE: 100,000 CYCLES.
5.OPERATING TEMPERATURE: -40 TO +85°C.
6.FRONT SEAL: IP 68.
RATING:
1.RESISTIVE LOAD: 15A 125/250VAC, 15A 28VDC. 2.INDUCTIVE LOAD: 15A 28VDC.

Model	Switching Position			Schematic
	1 2 COM. 3	1 2 COM. 3	1 2 COM. 3	
SG1	ON	NONE	ON	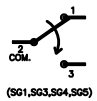 (SG1,SG3,SG4,SG5)
SG2	OFF	NONE	(ON)	
SG3	ON	OFF	ON	
SG4	(ON)	OFF	(ON)	
SG5	(ON)	OFF	ON	
SG9	OFF	NONE	ON	(SG2,SG9)
SGA	(OFF)	NONE	ON	
SGB	(ON)	NONE	ON	
SGC	ON	NONE	(ON)	
Term. Comm.	2-1	OPEN	2-3	

NO.	PART NAME	MATERIAL	Q'TY	FINISHING
1	ACTUATOR	COPPER ALLOY	1	Cr
2	HOUSING	NYLON (UL94V-0)	1	PLATED
3	BUSHING	ZINC ALLOY	1	
4	TERMINAL	COPPER ALLOY	3	Ag PLATED
5	CONTACT	COPPER ALLOY	1	Ag PLATED
6	O-RING	SILICONE RUBBER	1	
7	SHEEL	STAINLESS STELL	1	Ni PLATED

MING BIAO 铭标 2024.09.18 ISSUED R&D DEPT

RoHS COMPLIANT Pb Pb-Free HF Halogen Free

东莞市铭标电子科技有限公司
Ming Biao Electronic Technology Co. ,Ltd.

TOLERANCE UNLESS OTHERWISE STATED				DESIGN	DATE	TITLE	Toggle Switches
X.X	±0.20	SIZE	A4	wyj	2024. 09. 18		
X.XX	±0.15	REV	A	CHKD	DATE	MODEL	HT-SG4B9T5T11
X.XXX	±0.10	UNIT	mm	APPD	DATE	SHEET	1/2
∠	±2°	SCALE	1:1			PRINT DATE	2025.02.11