本公司智慧财产未经许可不得复制
ming biao copyright,may not be used without permission from ming biao.

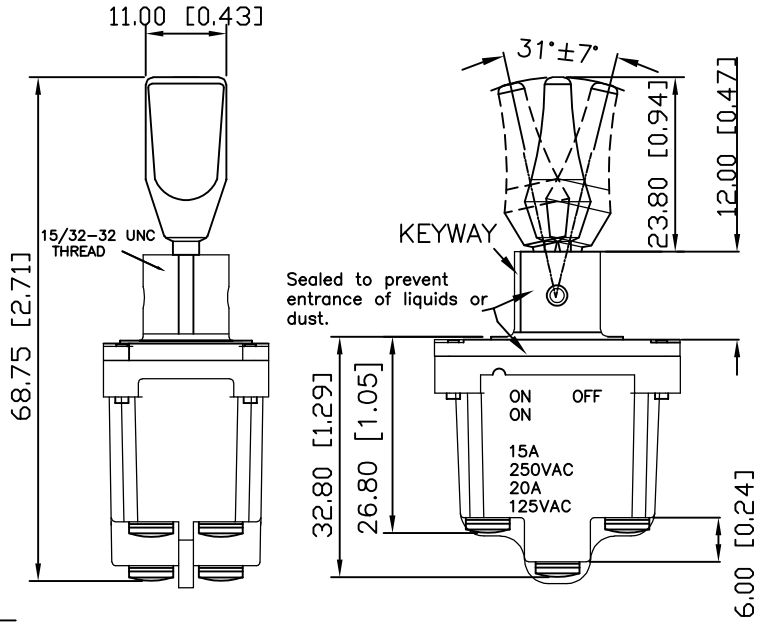

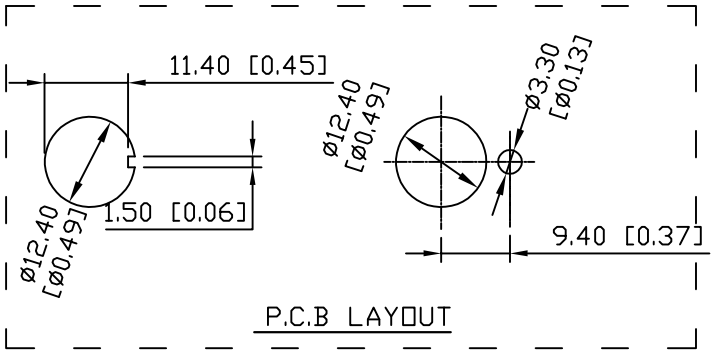

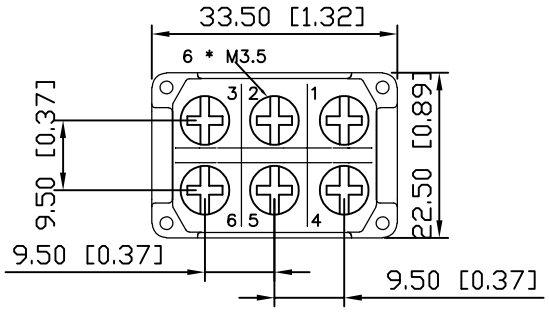

SPECIFICATIONS:
1.CONTACT RESISTANCE: 20mΩ.(Max)
2.INSULATION RESISTANCE: 100VDC-100MΩ.(Min)
3.DIELECTRIC STRENGTH: 1500VAC-1MINUTE.
4.MECHANICAL LIFE CYCLE: 100,000 CYCLES.
5.OPERATING TEMPERATURE: −40 TO +85°C.
6.FRONT SEAL: IP 68.

RATING:
1.RESISTIVE LOAD: 10A 125/250VAC, 15A 28VDC. 2.INDUCTIVE LOAD: 15A 28VDC.

NO.	PART NAME	MATERIAL	Q'TY	FINISHING
1	ACTUATOR	COPPER ALLOY	1	Cr PLATED
2	HOUSING	NYLON (UL94V-0)	1	
3	BUSHING	ZINC ALLOY	1	
4	TERMINAL	COPPER ALLOY	3	Ag PLATED
5	CONTACT	COPPER ALLOY	1	Ag PLATED
6	O-RING	SILICONE RUBBER	1	
7	SHEEL	STAINLESS STELL	1	Ni PLATED

Model	Switching Position			Schematic
	1 2 COM. 3	1 2 COM. 3	1 2 COM. 3	
DG1	ON	NONE	ON	
DG2	OFF	NONE	(ON)	
DG3	ON	OFF	ON	
DG4	(ON)	OFF	(ON)	
DG5	(ON)	OFF	ON	
DG6	ON	ON	ON	
DG7	(ON)	ON	(ON)	
DG8	(ON)	ON	ON	
DG9	OFF	NONE	ON	
Term. Comm.	2−1	OPEN	2−3	

MING BIAO 铭标 2024.09.15 ISSUED R&D DEPT

RoHS COMPLIANT Pb Pb-Free Halogen Free

东莞市铭标电子科技有限公司
Ming Biao Electronic Technology Co. ,Ltd.

TOLERANCE UNLESS OTHERWISE STATED			
X.X	±0.20	SIZE	A4
X.XX	±0.15	REV	A
X.XXX	±0.10	UNIT	mm
∠	±2°	SCALE	1:1

DESIGN	DATE 2024. 09. 15	TITLE	Toggle Switches
CHKD	DATE	MODEL	HT-DG3B4T1T11
APPD	DATE	SHEET	1/2
		PRINT DATE	2025.02.11