| NO. | PARTS | MATERIALS | Q'TY | FINISH |
|---|---|---|---|---|
| 6 | SPRING PLATE | PBS STRIP | 1 | NATURAL |
| 5 | CONTACT CLIP | PBS C5210R-EH | 2 | Ag CLAD |
| 4 | TERMINAL | BRASS STRIP | 12 | Ag PLATED |
| 3 | BASE | PHENOLIC RESIN | 1 | NATURAL |
| 2 | KNOB | PA66 | 1 | BLACK |
| 1 | FRAME | STEEL STRIP | 1 | Ni PLATED |

本公司智慧财产未经许可不得复制
ming biao copyright,may not be used without permission from ming biao.

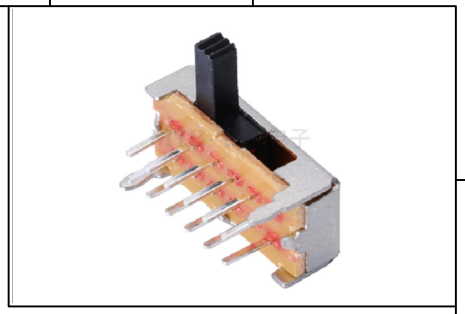

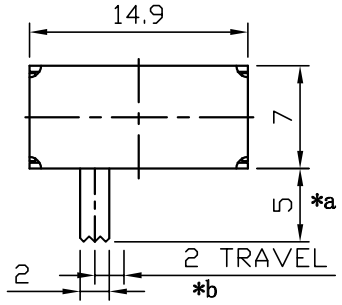


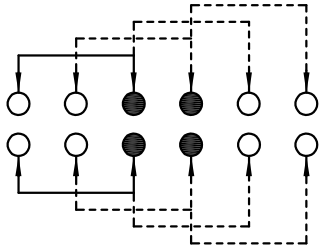

CIRCUIT

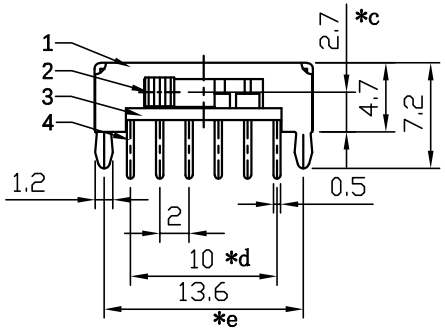


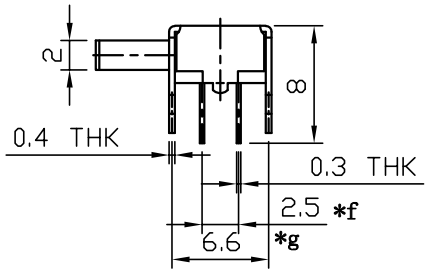


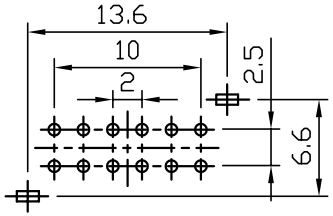


P.C.B LAYOUT

注: "*"表示关键尺寸(7个).

## SPECIFICATIONS:

Operating temperature range:-16℃to+60℃
Rating:0.5A.30V DC Max
Insulation resistance:100MΩ min.500V DC
Dielectric strength:500V AC for 1Min
Contact resistance:50mΩ Max
Life:10,000 Cycles
Travel:2.0mm
Operating force:300±100gf

MING BIAO 铭标 2024.08.31 ISSUED R&D DEPT

RoHS COMPLIANT Pb Pb-Free Halogen Free

东莞市铭标电子科技有限公司
Ming Biao Electronic Technology Co. ,Ltd.

| TOLERANCE UNLESS OTHERWISE STATED | | | | DESIGN | DATE | TITLE | HORIZONTAL SLIDE SWITCH |
|---|---|---|---|---|---|---|---|
| X.X | ±0.20 | SIZE | A4 | wyl | 2024. 08. 31 | | |
| X.XX | ±0.15 | REV | A | CHKD | DATE | MODEL | SK24D02G5-NF-Cs |
| X.XXX | ±0.10 | UNIT | mm | APPD | DATE | SHEET | 1/1 |
| ∠ | ±2° | SCALE | 2:1 | | | PRINT DATE | 2025.02.12 |