NO.	PARTS	MATERIALS	Q'TY	FINISH
6	SPRING PLATE	PBS STRIP	1	NATURAL
5	CONTACT CLIP	PBS C5210R-EH	2	Ag CLAD
4	TERMINAL	BRASS STRIP	8	Ag PLATED
3	BASE	PHENOLIC RESIN	1	NATURAL
2	FRAME	STEEL STRIP	1	Ni PLATED
1	KNOB	PA66	1	BLACK

本公司智慧财产未经许可不得复制
ming biao copyright,may not be used without permission from ming biao.

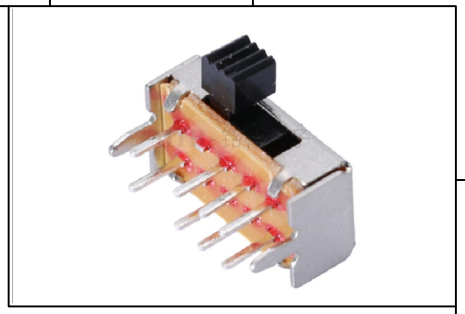

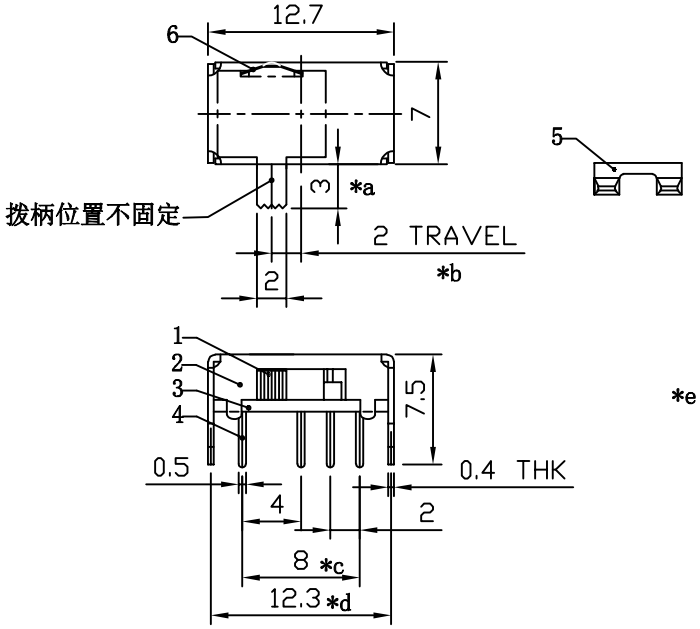

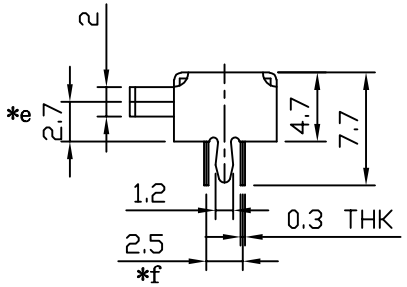

注:"*"表示关键尺寸(6个)

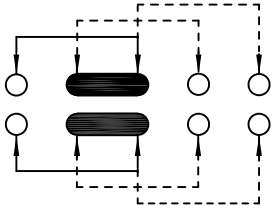

CIRCUIT

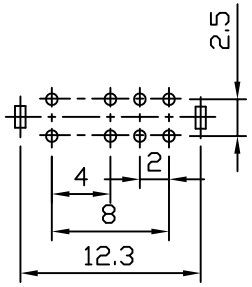

P.C.B LAYOUT

SPECIFICATIONS:

Operating temperature range:-16℃to+60℃
Rating:0.3A.50V DC Max
Insulation resistance:100MΩ min.500V DC
Dielectric strength:500V AC for 1Min
Contact resistance:50mΩ Max
Life:10,000 Cycles
Travel:2.0mm
Operating force:250±100gf

MING BIAO 铭标 2024.08.31 ISSUED R&D DEPT

RoHS COMPLIANT Pb Pb-Free Halogen Free

东莞市铭标电子科技有限公司
Ming Biao Electronic Technology Co. ,Ltd.

TOLERANCE UNLESS OTHERWISE STATED				DESIGN	DATE	TITLE	HORIZONTAL SLIDE SWITCH
X.X	±0.20	SIZE	A4	wyl	2024. 08. 31		
X.XX	±0.15	REV	A	CHKD	DATE	MODEL	SK23D07G3-NF-Cs
X.XXX	±0.10	UNIT	mm	APPD	DATE	SHEET	1/1
∠	±2°	SCALE	2:1			PRINT DATE	2025.02.12