NO.	PARTS	MATERIALS	Q'TY	FINISH
4	CONTACT	PBS WIRE	1	Ag PLATED
3	CASE	PPA/BRASS STRIP	1	BLACK/Ag PLATED
2	COVER	SUS	1	NATURAL
1	KNOB	PPA	1	BLACK

本公司智慧财产未经许可不得复制
ming biao copyright,may not be used without permission from ming biao.

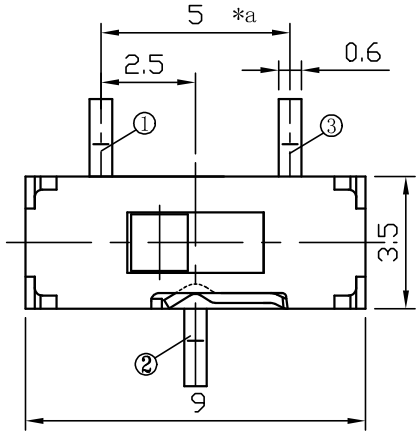

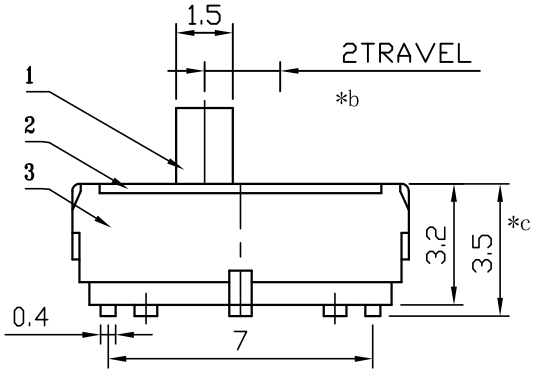

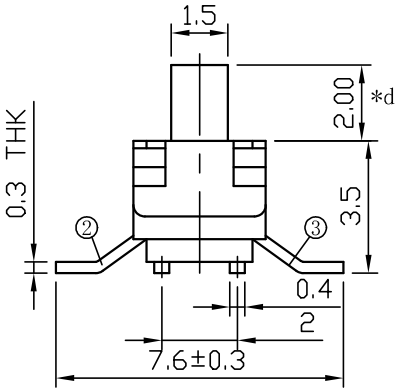

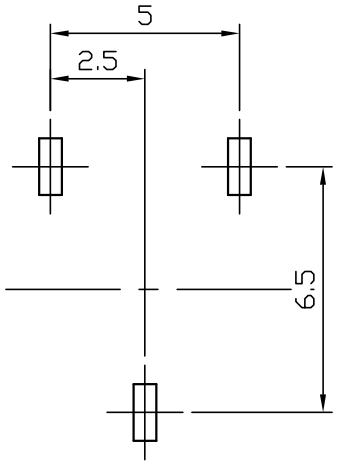

P.C.B LAYOUT

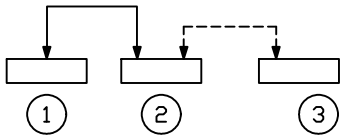

CIRCUIT

注:"*"表示关键尺寸(4个)

SPECIFICATIONS:

Operating temperature range:-20℃to+70℃
Rating:0.3A.6V DC Max
Insulation resistance:100MΩ min.500V DC
Dielectric strength:500V AC for 1Min
Contact resistance:70mΩ Max
Life:5,000 Cycles
Travel:2.0mm
Operating force:200±80gf

MING BIAO 铭标 2024.08.28 ISSUED R&D DEPT

RoHS COMPLIANT Pb Pb-Free Halogen Free

东莞市铭标电子科技有限公司
Ming Biao Electronic Technology Co. ,Ltd.

TOLERANCE				DESIGN	DATE	TITLE	MINI SLIDE SWITCH
UNLESS OTHERWISE STATED				wyj	2024. 08. 28		
X.X	±0.20	SIZE	A4	CHKD	DATE	MODEL	MS12D17G2-B 弹线
X.XX	±0.15	REV	A				
X.XXX	±0.10	UNIT	mm	APPD	DATE	SHEET	1/1
∠	±2°	SCALE	5:1			PRINT DATE	2025.06.11