本公司智慧财产未经许可不得复制
ming biao copyright,may not be used without permission from ming biao.

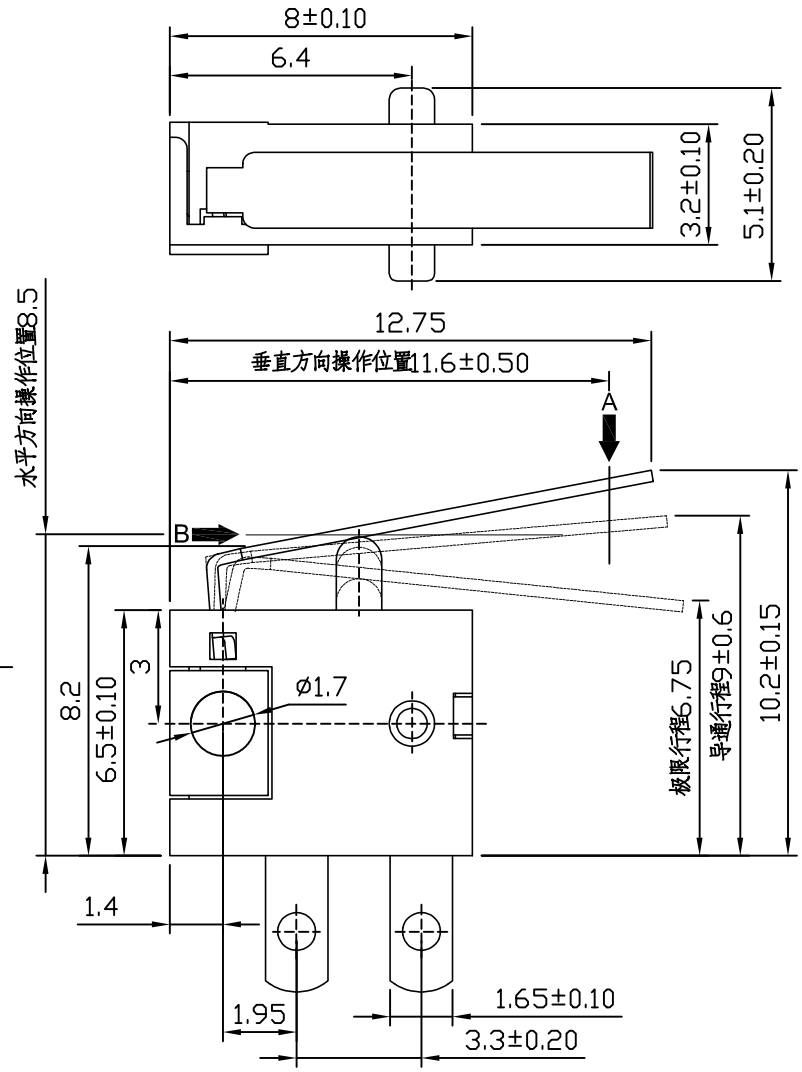

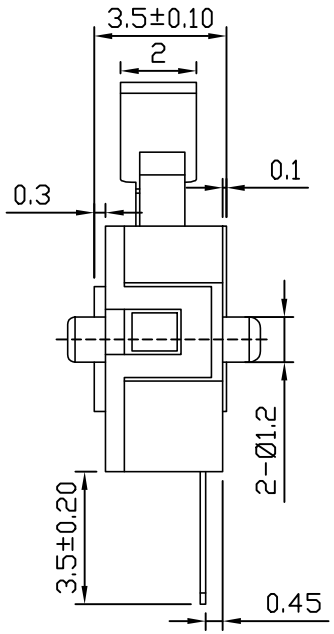

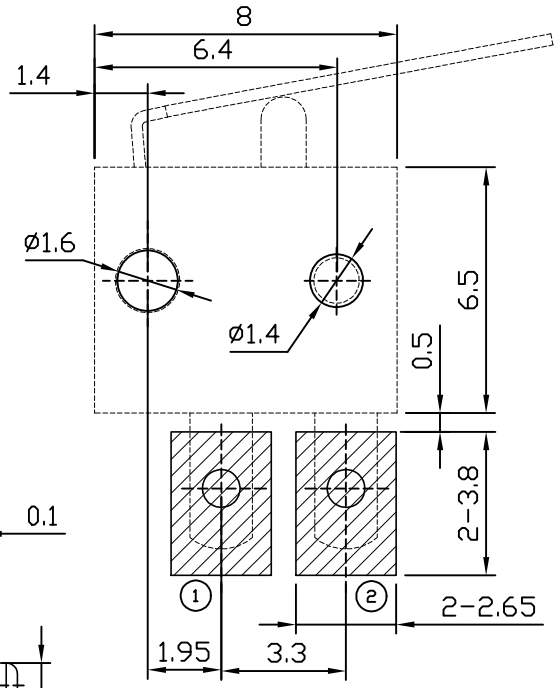

P.C.B LAYOUT

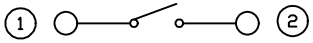

CIRCUIT

SPECIFICATIONS:

Operating temperature range:-10℃to+60℃
Rating:Max 500mA 12V DC
Insulation resistance:50MΩ min.100V DC
Dielectric strength:250V.AC.1Min
Contact resistance:200mΩ Max
Life:20,000 Cycles
Operating force:45±10gf Max

MING BIAO 铭标 2024.06.14 ISSUED R&D DEPT

RoHS COMPLIANT Pb Pb-Free Halogen Free

东莞市铭标电子科技有限公司
Ming Biao Electronic Technology Co. ,Ltd.

TOLERANCE			
UNLESS OTHERWISE STATED			
X.X	±0.20	SIZE	A4
X.XX	±0.15	REV	A
X.XXX	±0.10	UNIT	mm
∠	±2°	SCALE	5:1

DESIGN	DATE	TITLE	Detector Switch
wyj	2024. 06. 14		
CHKD	DATE	MODEL	LM-V-103B-12
APPD	DATE	SHEET	1/3
		PRINT DATE	2025.06.13