本公司智慧财产未经许可不得复制
ming biao copyright,may not be used without permission from ming biao.

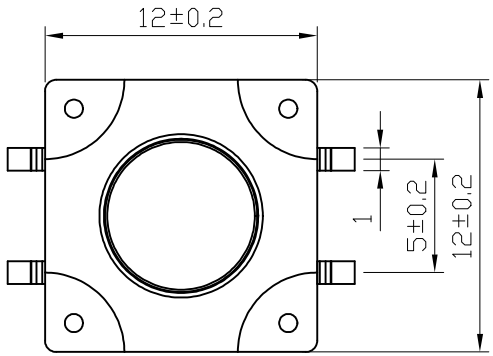

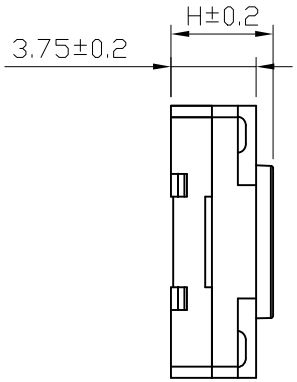

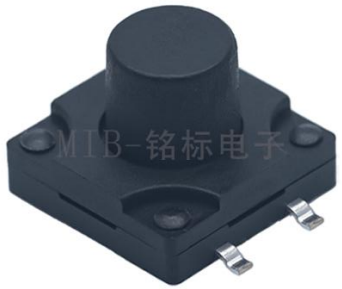

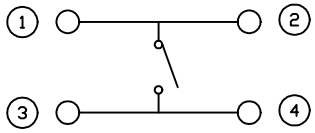

CIRCUIT

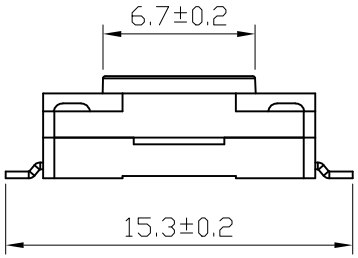

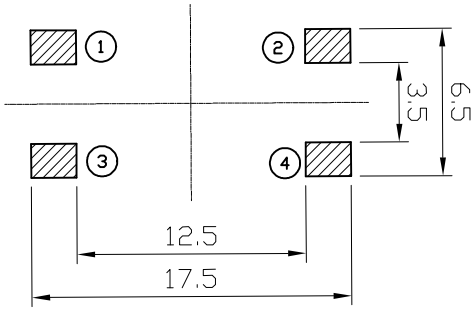

P.C.B LAYOUT

SPECIFICATIONS:

Operating temperature range:-20℃to+70℃
Rating:50mA DC12V Max
Insulation resistance:100MΩ min.100V DC
Dielectric strength:250V.AC.1Min
Contact resistance:100mΩ Max
Life:100,000 Cycles
Travel:0.45±0.10mm
Operating force:250±40gf

H	
4.3	4.5
5.0	5.5
6.0	6.5
……	……
13.0	13.5
14.0	15.0

MING BIAO 铭标 2024.03.12 ISSUED R&D DEPT

RoHS COMPLIANT Pb Pb-Free HF Halogen Free

东莞市铭标电子科技有限公司
Ming Biao Electronic Technology Co. ,Ltd.

TOLERANCE			
UNLESS OTHERWISE STATED			
X.X	±0.20	SIZE	A4
X.XX	±0.15	REV	A
X.XXX	±0.10	UNIT	mm
∠	±2°	SCALE	3:1

DESIGN	DATE	TITLE	Tact Switch
wyf	2024.03.12		
CHKD	DATE	MODEL	TVDM03-C-R
APPD	DATE	SHEET	1/3
		PRINT DATE	2025.05.26