H	
2.5	3.1
3.4	

本公司智慧财产未经许可不得复制
ming biao copyright,may not be used without permission from ming biao.

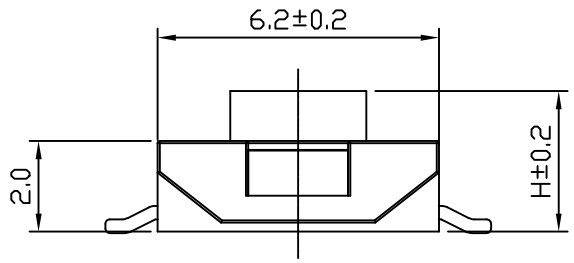

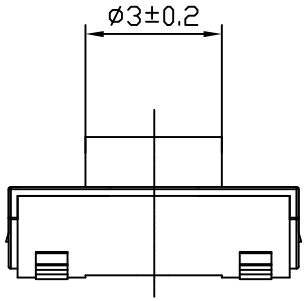

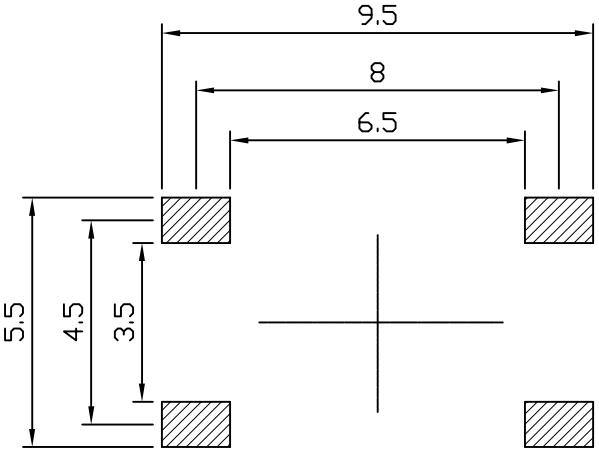

P.C.B LAYOUT

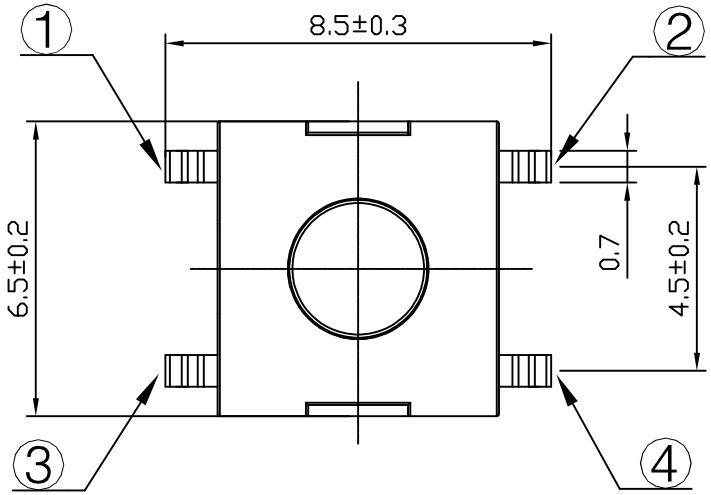

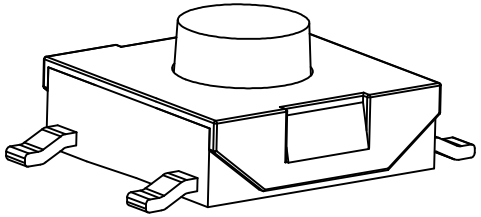

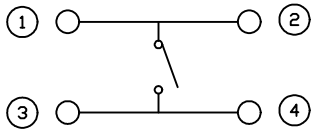

CIRCUIT

SPECIFICATIONS:

Operating temperature range:-20℃to+80℃
Rating:50mA DC 12 V Max
Insulation resistance:100MΩ min.100V DC
Dielectric strength:250V AC for 1min
Contact resistance:100mΩ Max
Life:3,000,000 Cycles
Travel:0.25±0.1mm
Operating force:180&250±50gf

MING BIAO 铭标 2025.07.12 REF.ONLY R&D DEPT

RoHS COMPLIANT Pb Pb-Free HF Halogen Free

东莞市铭标电子科技有限公司
Ming Biao Electronic Technology Co. ,Ltd.

TOLERANCE UNLESS OTHERWISE STATED				DESIGN	DATE	TITLE	Tact Switch
X.X	±0.20	SIZE	A4	wyj	2025. 07. 12		
X.XX	±0.15	REV	A	CHKD	DATE	MODEL	TVCM52-034NUS-R
X.XXX	±0.10	UNIT	mm	APPD	DATE	SHEET	1/3
∡	±2°	SCALE	6:1			PRINT DATE	2025.07.12