本公司智慧财产未经许可不得复制
ming biao copyright,may not be used without permission from ming biao.

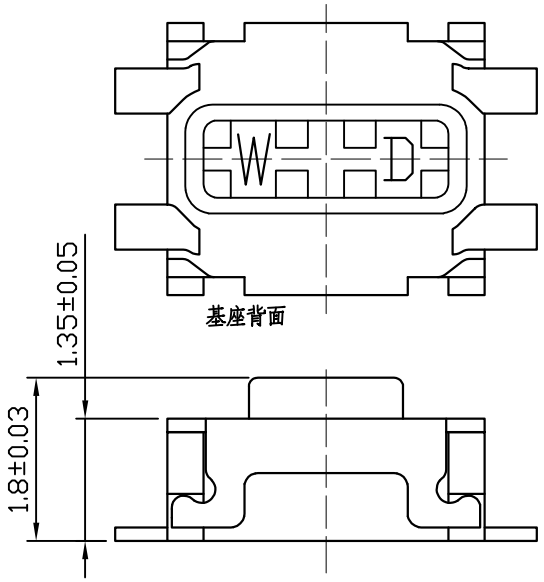

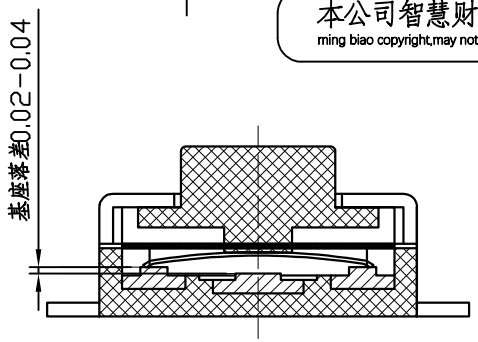

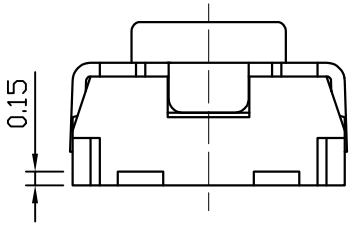

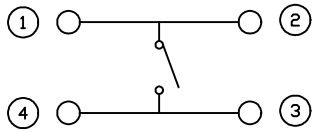

CIRCUIT

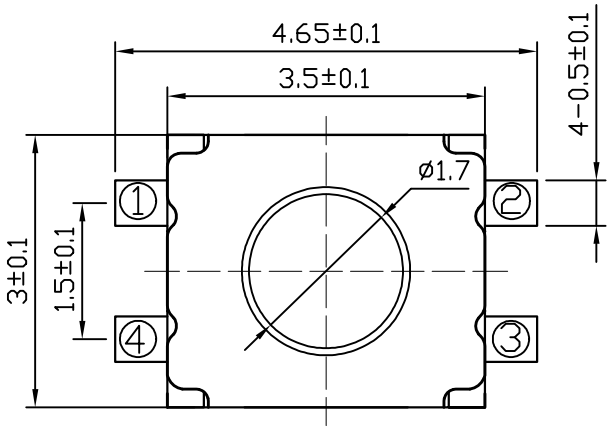

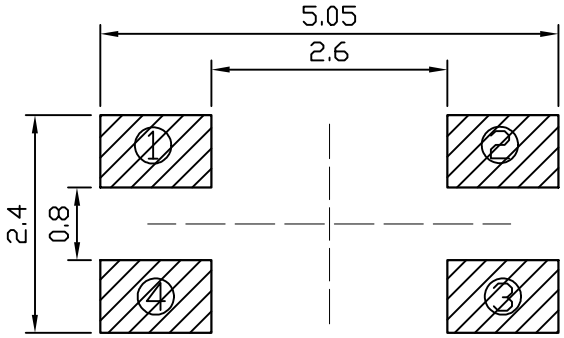

P.C.B LAYOUT

SPECIFICATIONS:

Operating temperature range:-20℃to+70℃
Rating:50mA 12V DC Max
Insulation resistance:100MΩ min.100V DC
Dielectric strength:250V AC for 1Min
Contact resistance:100mΩ Max
Life:30,000 Cycles
Travel:0.2±0.1mm
Operating force:300±50gf

MING BIAO 铭标 2025.09.11 ISSUED R&D DEPT

RoHS COMPLIANT Pb Pb-Free Halogen Free

东莞市铭标电子科技有限公司
Ming Biao Electronic Technology Co. ,Ltd.

TOLERANCE				DESIGN	DATE	TITLE	四脚小龟上按
UNLESS OTHERWISE STATED				wyj	2025. 09. 11		
X.X	±0.20	SIZE	A4	CHKD	DATE	MODEL	TVBF11-018X-R
X.XX	±0.15	REV	A				
X.XXX	±0.10	UNIT	mm	APPD	DATE	SHEET	1/3
∠	±2°	SCALE	12:1			PRINT DATE	2025.09.11