H	对应高度
0.9	4.3h
1.6	5h
2.1	5.5h
2.6	6h
3.1	6.5h
3.6	7h
4.1	7.5h
4.6	8h
5.1	8.5h
5.6	9h
6.1	9.5h
6.6	10h

本公司智慧财产未经许可不得复制
ming biao copyright,may not be used without permission from ming biao.

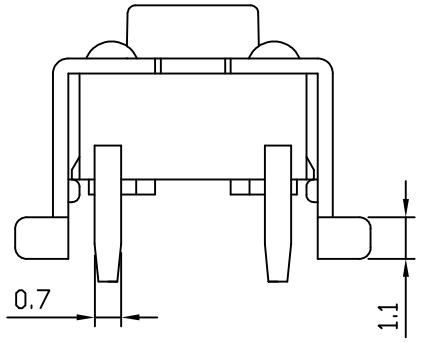

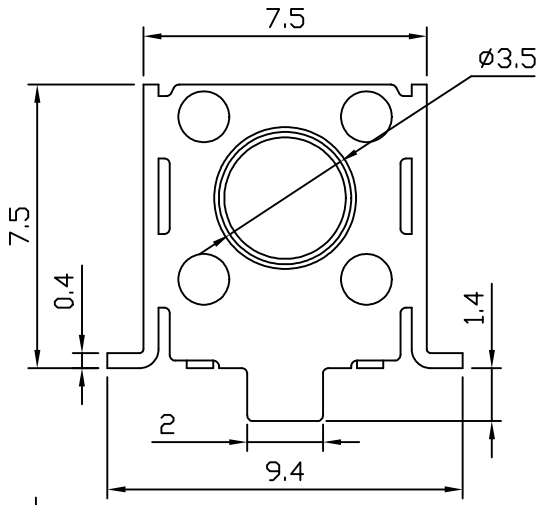

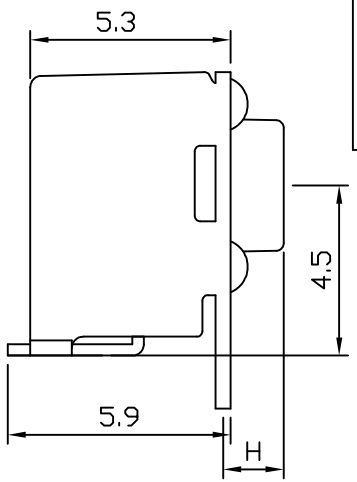

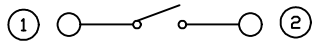

CIRCUIT

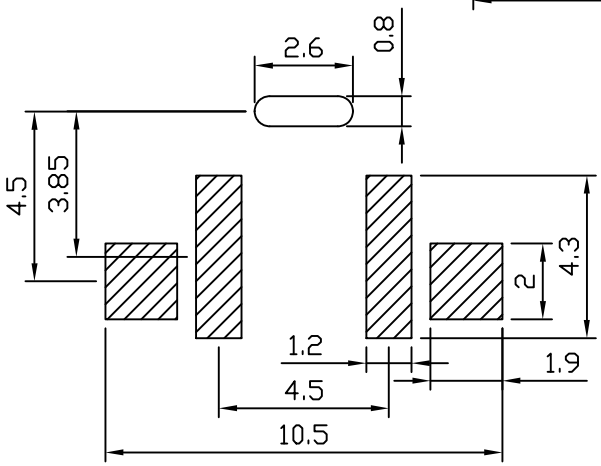

P.C.B LAYOUT

SPECIFICATIONS:

Operating temperature range:-20℃to+70℃
Rating:50mA 12V DC Max
Insulation resistance:100MΩ min.100V DC
Dielectric strength:250V AC for 1Min
Contact resistance:100mΩ Max
Life:100,000 Cycles
Travel:0.20±0.10mm
Operating force:250±40gf

序号	名称	数量	材料	备注
5	按钮	1	PPA	黑色
4	卡件	1	黄铜	镀银
3	盖板	1	铁	镀锡
2	弹片	1	不锈钢	镀银
1	本体	1	PPA	黑色

MING BIAO 铭标 2025.01.08 ISSUED R&D DEPT

RoHS COMPLIANT Pb Pb-Free Halogen Free

东莞市铭标电子科技有限公司
Ming Biao Electronic Technology Co. ,Ltd.

TOLERANCE			
UNLESS OTHERWISE STATED			
X.X	±0.20	SIZE	A4
X.XX	±0.15	REV	A
X.XXX	±0.10	UNIT	mm
∠	±2°	SCALE	5:1

DESIGN	DATE 2025.01.08	TITLE	Tact Switch
CHKD	DATE	MODEL	THCM30
APPD	DATE	SHEET	1/3
		PRINT DATE	2025.05.19