本公司智慧财产未经许可不得复制
ming biao copyright,may not be used without permission from ming biao.

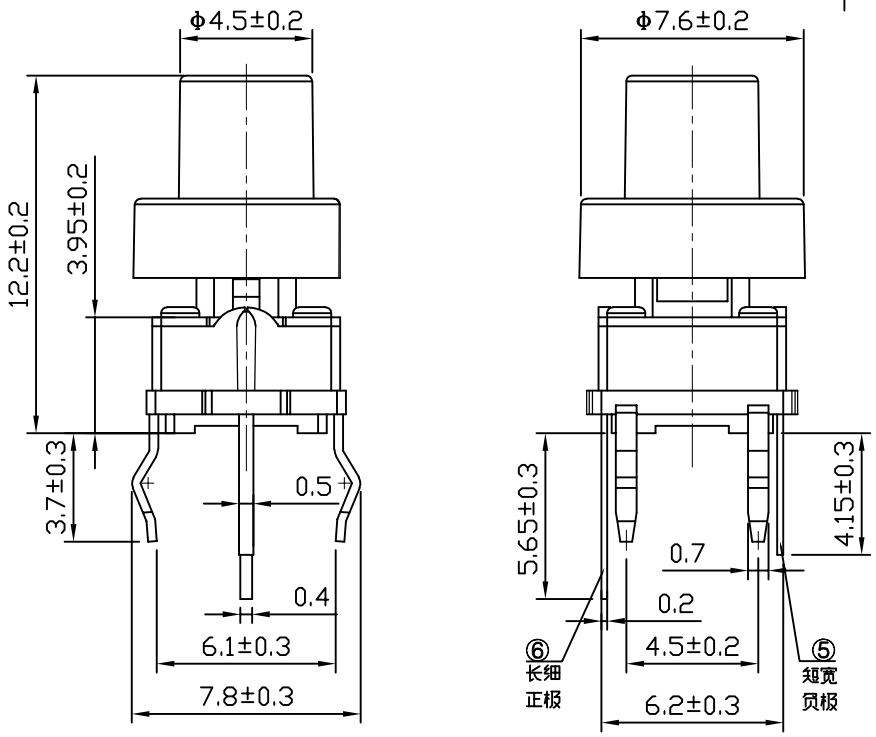

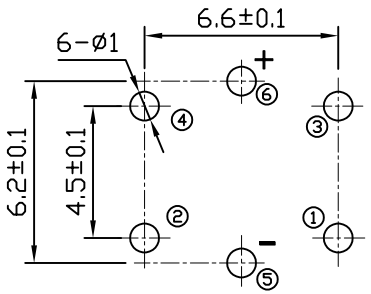

P.C.B LAYOUT

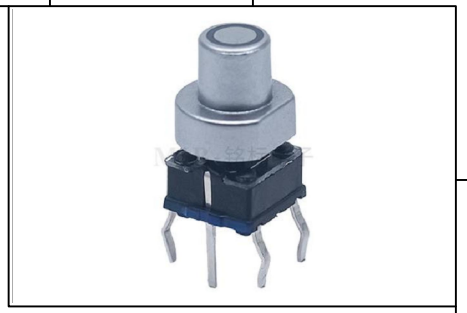

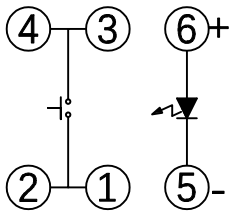

CIRCUIT

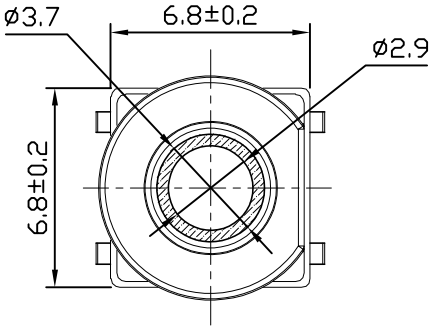

SPECIFICATIONS:

Operating temperature range:-25℃to+75℃
Rating:30V DC,30mA
Insulation resistance:100MΩ min.100V DC
Dielectric strength:250V.AC.1Min
Contact resistance:50mΩ Max
Life:100,000 Cycles
Travel:0.25±0.1mm
Operating force:160±50gf

灯光	灯光代码
白光	W white
红光	R Red
绿光	G Green
黄光	Y Yellow
蓝光	BL Blue
..	....

MING BIAO 铭标 2024.06.21 ISSUED R&D DEPT

RoHS COMPLIANT Pb Pb-Free Halogen Free

东莞市铭标电子科技有限公司
Ming Biao Electronic Technology Co. ,Ltd.

TOLERANCE UNLESS OTHERWISE STATED				DESIGN	DATE	TITLE	Illuminated Switch
				wyl	2024. 06. 21		
X.X	±0.20	SIZE	A4	CHKD	DATE	MODEL	LSP704-122J-R
X.XX	±0.15	REV	A				
X.XXX	±0.10	UNIT	mm	APPD	DATE	SHEET	1/3
∠	±2°	SCALE	4:1			PRINT DATE	2025.02.11