本公司智慧财产未经许可不得复制
ming biao copyright,may not be used without permission from ming biao.

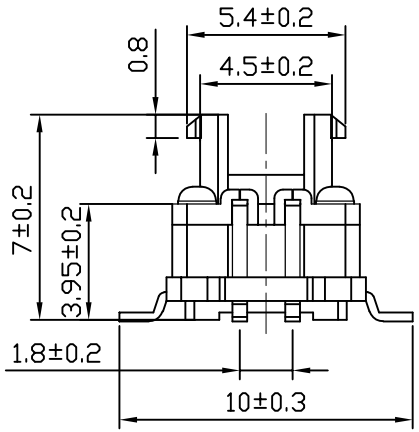

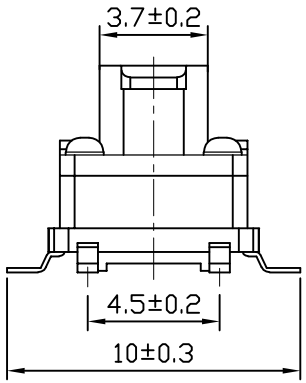

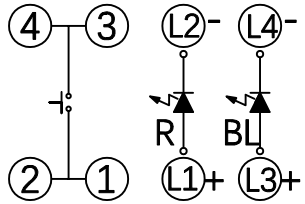

CIRCUIT

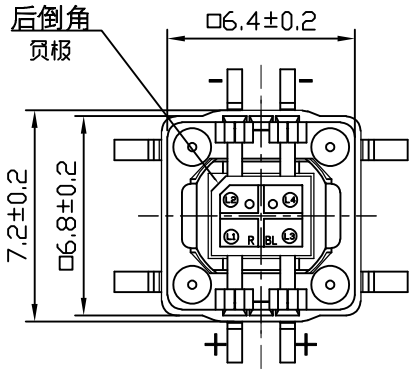

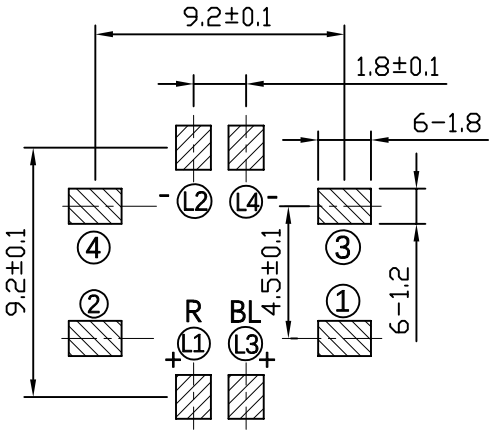

P.C.B LAYOUT

SPECIFICATIONS:

Operating temperature range:-25℃to+75℃
Rating:30V DC,30mA
Insulation resistance:100MΩ min.100V DC
Dielectric strength:250V.AC.1Min
Contact resistance:50mΩ Max
Life:100,000 Cycles
Travel:0.25±0.1mm
Operating force:260±50gf

双色引脚代码 L1,L3-L2	灯色代码
红,蓝-倒角负	R/BL
蓝,黄-倒角负	BL/Y
红,白-倒角负	R/W
红,绿-倒角负	R/G
红,冰蓝-倒角负	R/IBL
黄,白-倒角负	Y/W
绿,白-倒角负	G/W
绿,蓝-倒角负	G/BL
····	··

MING BIAO 铭标 2024.06.21 ISSUED R&D DEPT

RoHS COMPLIANT Pb Pb-Free Halogen Free

东莞市铭标电子科技有限公司
Ming Biao Electronic Technology Co. ,Ltd.

TOLERANCE UNLESS OTHERWISE STATED				DESIGN	DATE	TITLE	Illuminated Switch
X.X	±0.20	SIZE	A4	wyj	2024. 06. 21		
X.XX	±0.15	REV	A	CHKD	DATE	MODEL	LSM709-070R-R
X.XXX	±0.10	UNIT	mm	APPD	DATE	SHEET	1/3
∠	±2°	SCALE	4:1			PRINT DATE	2025.02.11